FEMALE END VIEW (J1)

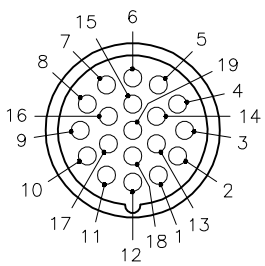

1 = PINK
2 = YELLOW
3 = GREEN/YELLOW
4 = N/C
5 = BLUE
6 = RED
7 = N/C
8 = WHITE
9 = VIOLET
10 = N/C
11 = GRAY
12 = GREEN
13 = N/C
14 = N/C
15 = BROWN
16 = N/C
17 = N/C
18 = N/C
19 = BLACK

M23 connector

MALE END VIEW (P1)

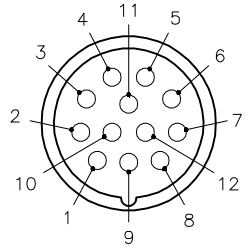

1 = BROWN
2 = BLUE
3 = WHITE
4 = GREEN/YELLOW
5 = VIOLET
6 = YELLOW
7 = GRAY
8 = PINK
9 = RED
10 = N/C
11 = BLACK
12 = GREEN

M23 connector

SPECIFICATIONS

CONTACT CARRIER MATERIAL	NYLON or PBT
MOLDED HEAD MATERIAL/COLOR	TPU/BLACK
CONTACT MATERIAL/PLATING	BRASS/GOLD
COUPLING NUT MATERIAL/PLATING	BRASS/NICKEL
RATED CURRENT [A]	6.0 A
RATED VOLTAGE [V]	150 V
OUTER JACKET MATERIAL/COLOR	PVC/YELLOW
CONDUCTOR INSULATION MATERIAL	PVC
NUMBER OF CONDUCTORS	11x18 AWG
DRAIN/SHIELD	20 AWG/ALUM.–POLYESTER FOIL
TEMPERATURE RATING	–40˚C to +105˚C (–40˚F to +221˚F)
PROTECTION CLASS	IEC IP67

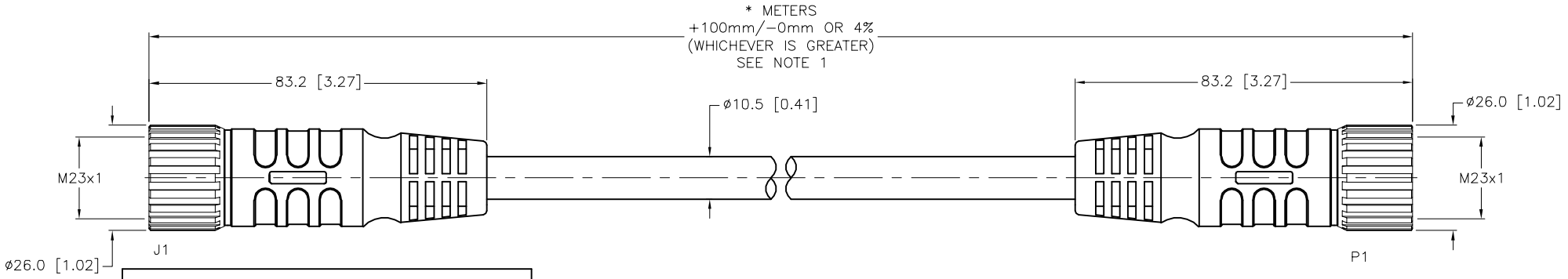

WIRING DIAGRAM

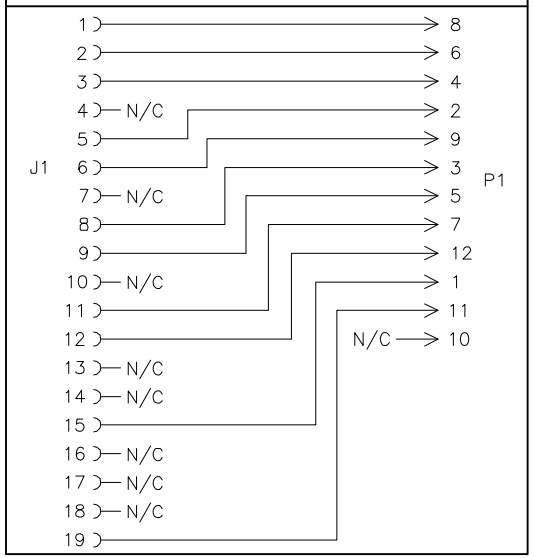

NOTES:

1. "*" INDICATES CABLE LENGTH IN METERS. CONTACT TURCK TO ORDER SPECIFIC LENGTHS.

2. "/S3521" DESIGNATES CUSTOM WIRING.

REV	DESCRIPTION	BY	DATE	ECO NO.
C	UPDATE VOLTAGE TO 150 V	ER	12/13/18	67826

SOURCE DRAWING - FOR REFERENCE ONLY

RELATED DOCUMENTS
1.
2.
3.
4.

3RD ANGLE PROJECTION

THIS DRAWING IS CONFIDENTIAL AND THE PROPERTY OF TURCK INC. USE OF THIS DOCUMENT WITHOUT WRITTEN PERMISSION IS PROHIBITED.

TURCK

3000 CAMPUS DRIVE
MINNEAPOLIS, MN 55441
1–800–544–7769
(763) 553–7300
(763) 553–0708 fax
www.turck.us

MATERIAL: SEE SPECIFICATIONS

FINISH: SEE SPECIFICATIONS

ALL DIMENSIONS DISPLAYED ON THIS DRAWING ARE FOR REFERENCE ONLY

CONTACT TURCK FOR MORE INFORMATION

DRFT: ER | DATE: 08/07/18
APVD: | SCALE: 1=1.5

UNIT OF MEASUREMENT
MILLIMETER [INCH]
DO NOT SCALE THIS DRAWING

DESCRIPTION: CKM 19–11–*–CSM 12–11/S3521

IDENTIFICATION NO.:

REV: C

FILE: 777042036

SHEET 1 OF 1